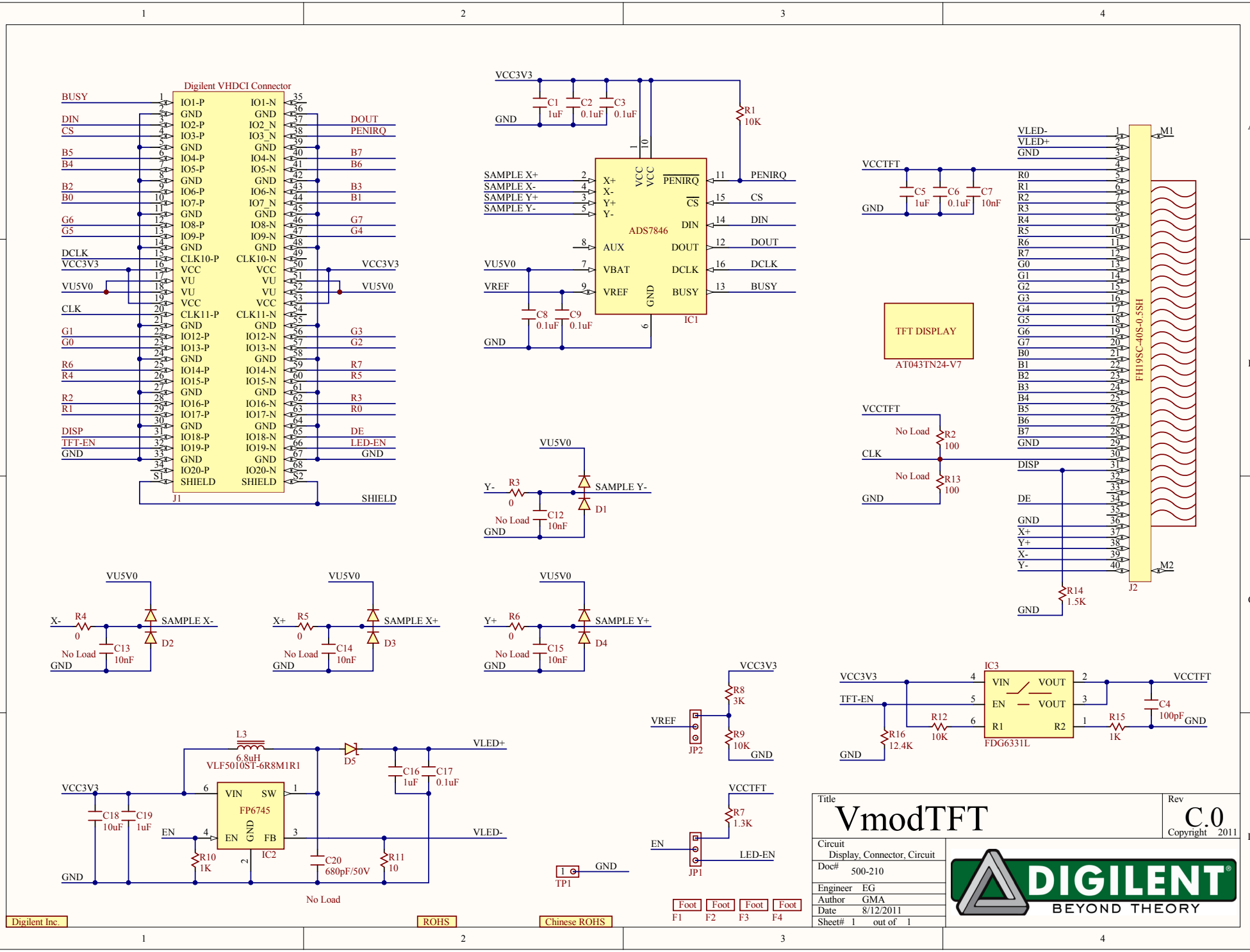
Digilent VHDCI Connector
J1
ADS7846
IC1
TFT DISPLAY
AT043TN24-V7
FH19SC-40S-0.5SH
J2
FP6745
IC2
L3
6.8uH
VLF5010ST-6R8M1R1
FDG6331L
IC3
JP1
JP2
TP1
Foot
Foot
Foot
Foot
F1
F2
F3
F4
No Load
Title
VmodTFT
Rev
C.0
Copyright 2011
Circuit
Display, Connector, Circuit
Doc# 500-210
Engineer EG
Author GMA
Date 8/12/2011
Sheet# 1 out of 1
DIGILENT
BEYOND THEORY
Digilent Inc.
ROHS
Chinese ROHS